andis®

MODEL BTFL TRIMMER
120 VOLT

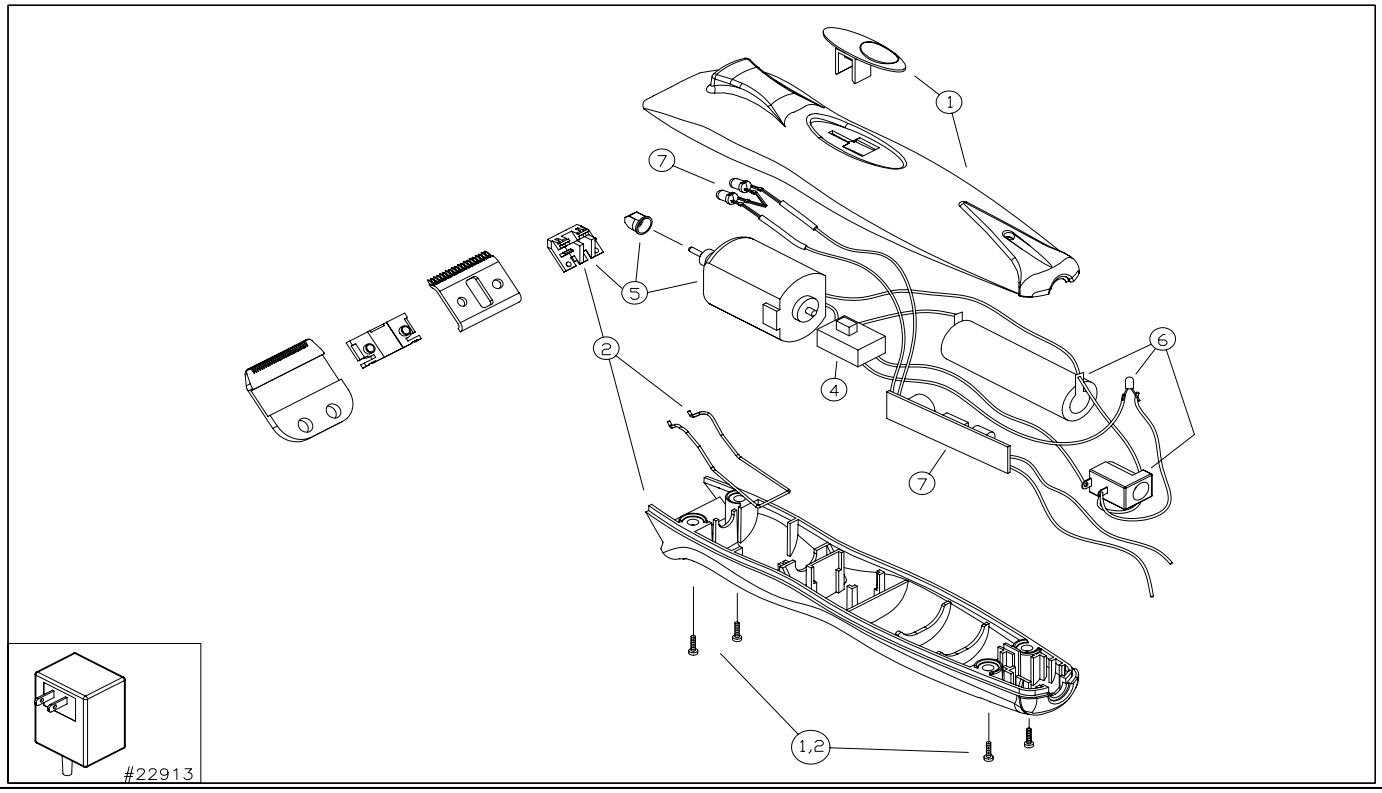

ITEM NO.	PART NO.	DESCRIPTION	QTY. REQ'D
1		Upper Housing Assembly:	
		(Includes Upper Housing, Housing Screws, and Switch Actuator)	
1a	23202	Upp. Hsg. Assembly Inferno Red	1
1b	23203	Upp. Hsg. Assembly Chrome	1
2		Lower Housing Assembly	
		(Includes Lower Housing, Tension Spring, Housing screws, and Blade Yoke)	
2a	22954	Lower Housing Assembly/Black	1
2b	23204	Lower Housing Assembly/Black W/ Soft Grip	1
3	22913	Transformer	1
4	22939	Switch	1
5	22941	Motor Assembly	1
		(Includes Motor, Cam, Guide Block, and Blade Yoke)	
6	22943	Battery Assembly	1
		(Includes Battery (NIMH), LED, and Input Connector Jack)	
7	23206	Circuit Board/LED Assembly	1

ITEM NO.	PART NO.	DESCRIPTION	QTY. REQ'D

IMPORTANT INFORMATION

When ordering repair parts, include part number, part name and model of trimmer. For best performance, trimmer blades should be CLEANED and OILED with Andis Clipper Oil before and after use, If repair is necessary, return to any Andis Authorized Repair Service Station, or to Andis Company, 1800 Renaissance Blvd., Sturtevant, Wisconsin, 53177 U.S.A.. Pack carefully, mail either Insured Parcel Post, or U.P.S. , attach a letter to outside of package explaining difficulty.

Download from Www.Somanuals.com. All Manuals Search And Download.

Free Manuals Download Website

http://myh66.com

http://usermanuals.us

http://www.somanuals.com

http://www.4manuals.cc

http://www.manual-lib.com

http://www.404manual.com

http://www.luxmanual.com

http://aubethermostatmanual.com

Golf course search by state

http://golfingnear.com

Email search by domain

http://emailbydomain.com

Auto manuals search

http://auto.somanuals.com

TV manuals search

http://tv.somanuals.com